FLUTE 0.750



KMC
GLASS

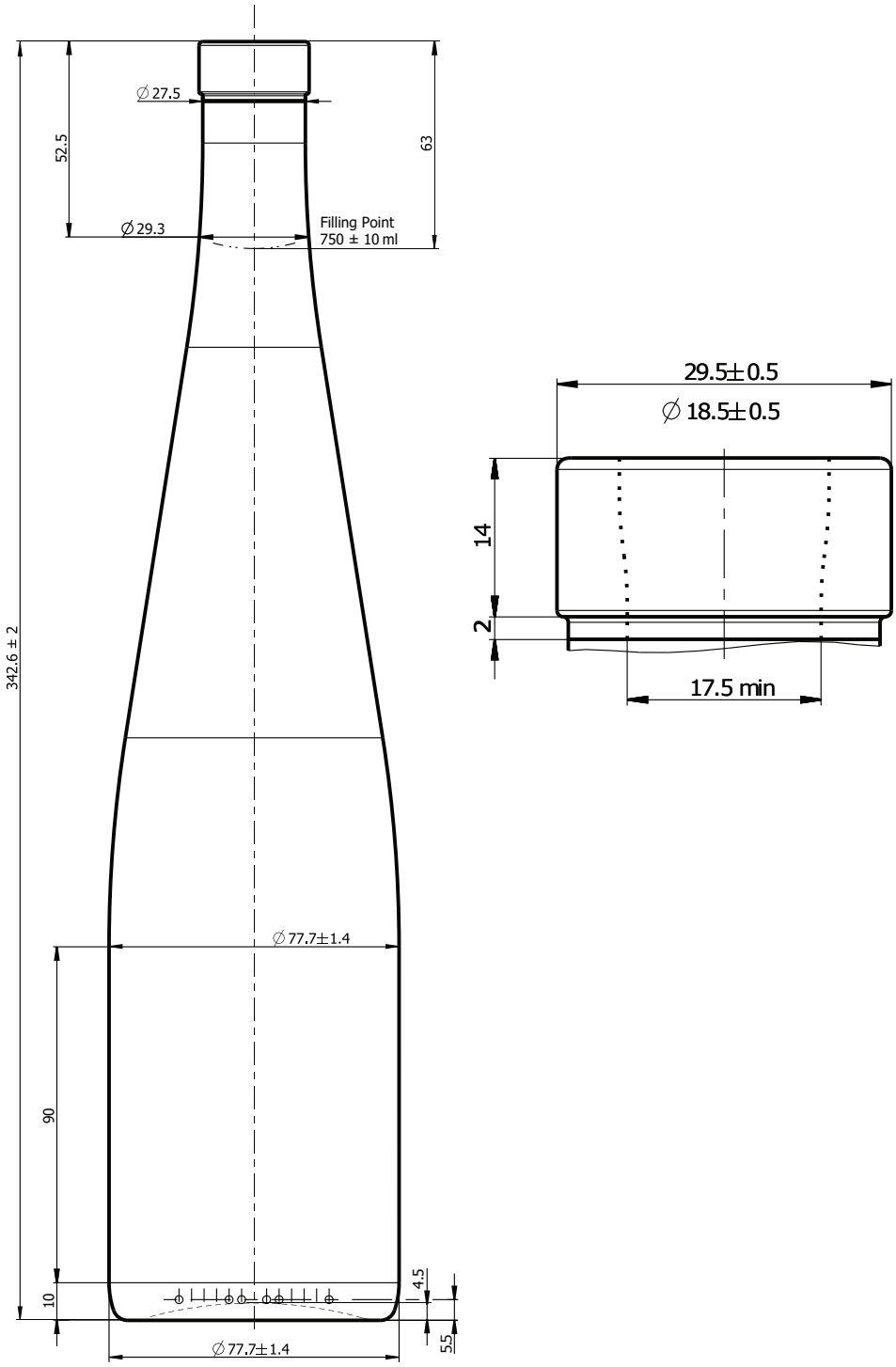

- Flute 0.750
- Weight - 560 g
- Filling CAP - 750 ml
- Color - Olive Green
- Diameter - 77.7 ± 1.4
- Entrance bore diameter - 18.5

www.kmc.glass
sales@kmc.glass

KMC GLASS